INSET GLASS DOOR HINGE

NO SCREW

GH-34/0

GH-34/0/CR

GH-34/0/BL

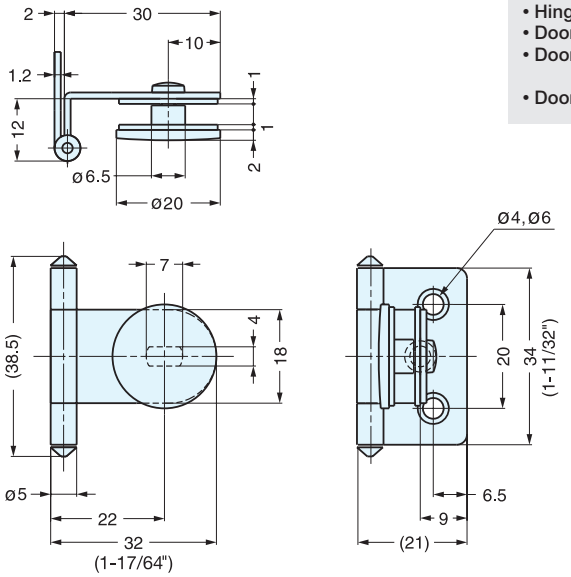

- Hinge for glass/acrylic doors.
- Door thickness: 4~6 mm
- Door size: Max. W450 × H700 (W17-3/4" × H27-9/16")
- Door weight: Max. 4 kg/pair (8.8 lbs/pair)

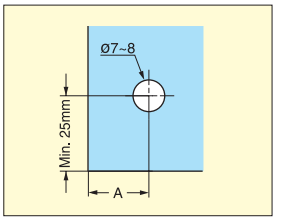

Cut Out Dimension

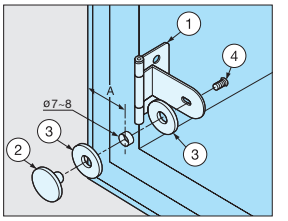

Installation

Glass Thickness (mm)	A (mm)
4	19
5	18
6	17

Item No.	Weight (g)	Box (pcs)	Carton (pcs)
GH-34/0/CR-P	23.5	100	600
GH-34/0/BL-P		150	900

No.	Part Name	Material	Finish
①	Body	Steel	Chrome/ Black
②	Plate	Zinc Alloy	
③	Washer	PVC	Clear
④	Screw	Steel	Nickel/ Black

HALF OVERLAY GLASS DOOR HINGE

NO SCREW

GH-34/8

GH-34/8/CR

GH-34/8/BL

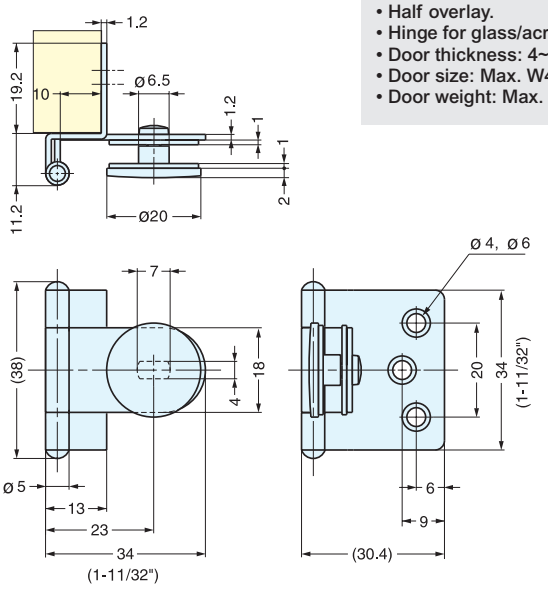

- Half overlay.
- Hinge for glass/acrylic doors.
- Door thickness: 4~6 mm
- Door size: Max. W450 × H700 (W17-3/4" × H27-9/16")
- Door weight: Max. 4 kg/pair (8.8 lbs/pair)

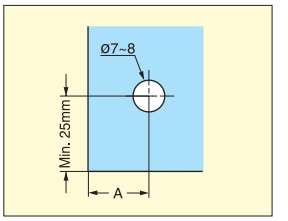

Cut Out Dimension

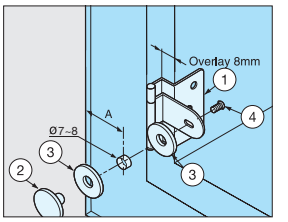

Installation

Glass Thickness (mm)	A (mm)	Overlay (mm)
4	19	8
5	18	7
6	17	6

Item No.	Weight (g)	Box (pcs)	Carton (pcs)
GH-34/8/CR	25	50	500
GH-34/8/BL			

No.	Part Name	Material	Finish
①	Body	Steel	Chrome/ Black
②	Plate	Zinc Alloy	
③	Washer	PVC	Clear
④	Screw	Steel	Nickel/ Black